ASSIGNMENT – 7

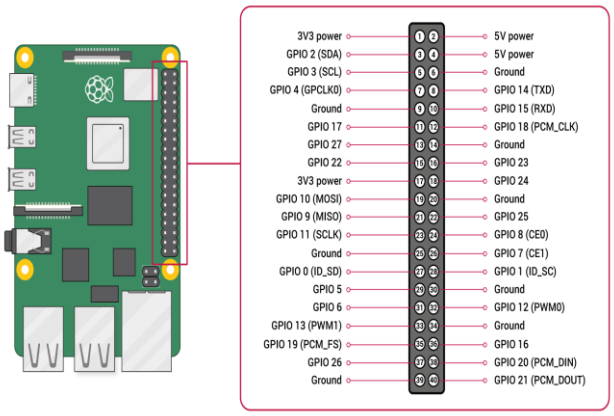

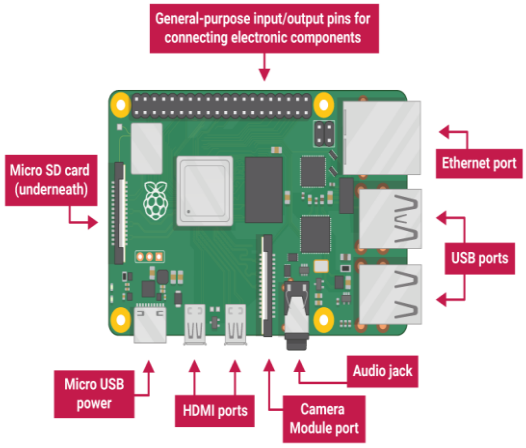

RASPBERRY PI ARCHITECTURE (BLOCK DIAGRAM)

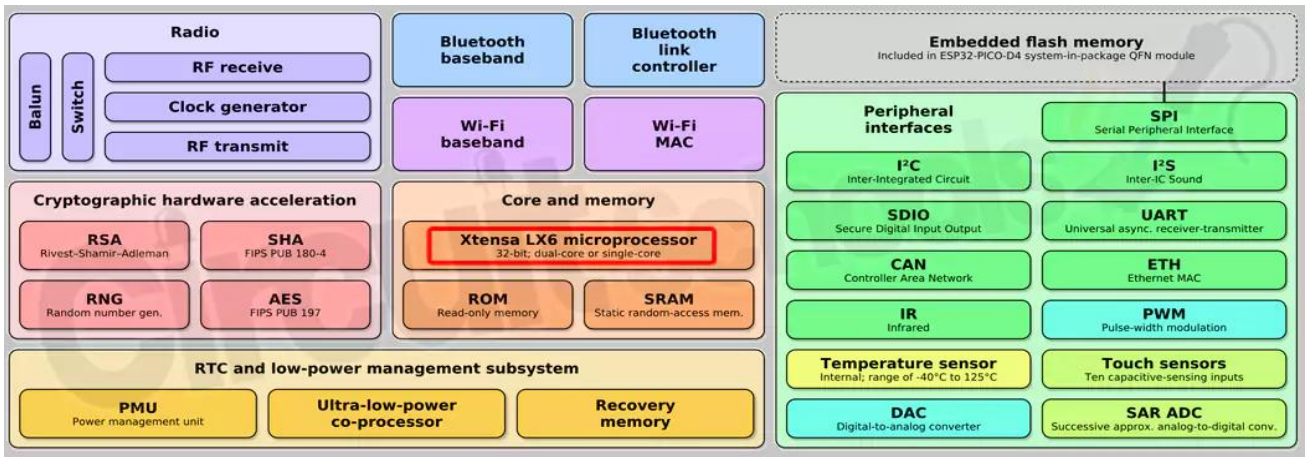

ESP32 ARCHITECTURE (BLOCK DIAGRAM)

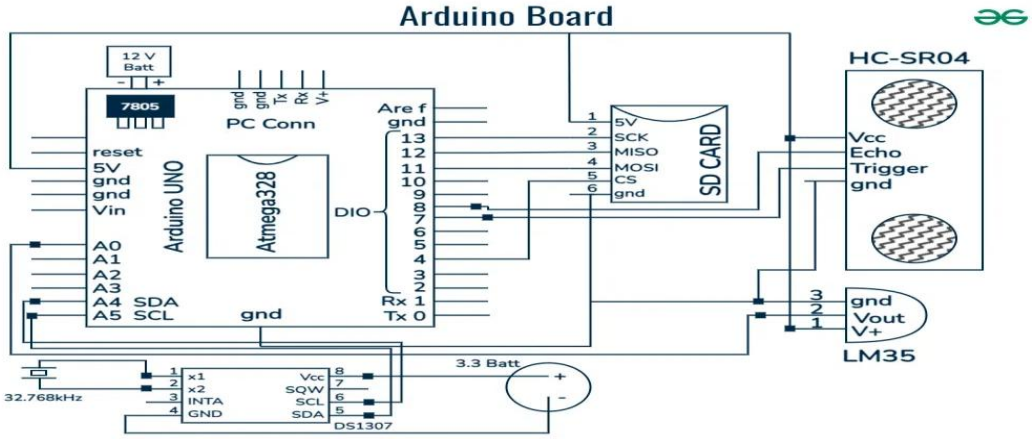

ARDUINO UNO BLOCK DIAGRAM

ASSIGNMENT – 9

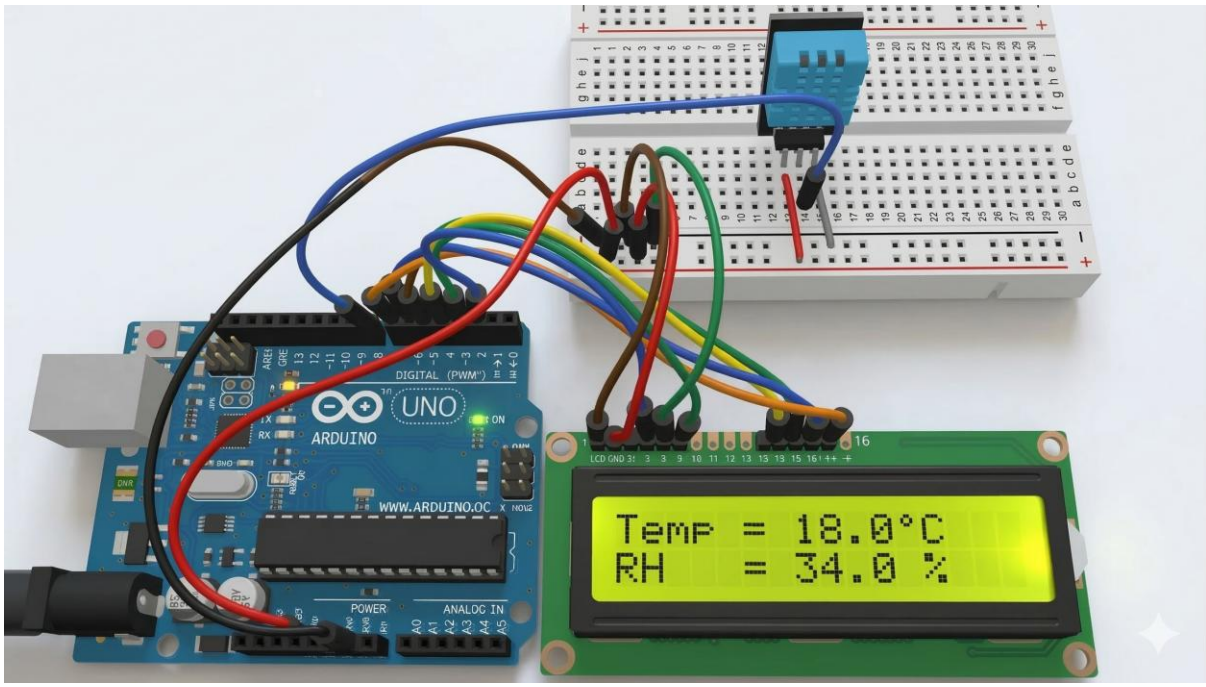

To design a system using **Arduino UNO and DHT11 sensor** to measure temperature and humidity and display values on **16×2 LCD**.(TINKERCAD)

Component	**Specification**
Arduino UNO	ATmega328P microcontroller
DHT11 Sensor	Temperature & humidity sensor
16×2 LCD	Display module
10k Potentiometer	LCD contrast control
Breadboard	Circuit assembly
Jumper wires	Connections

ASSIGNMENT – 10

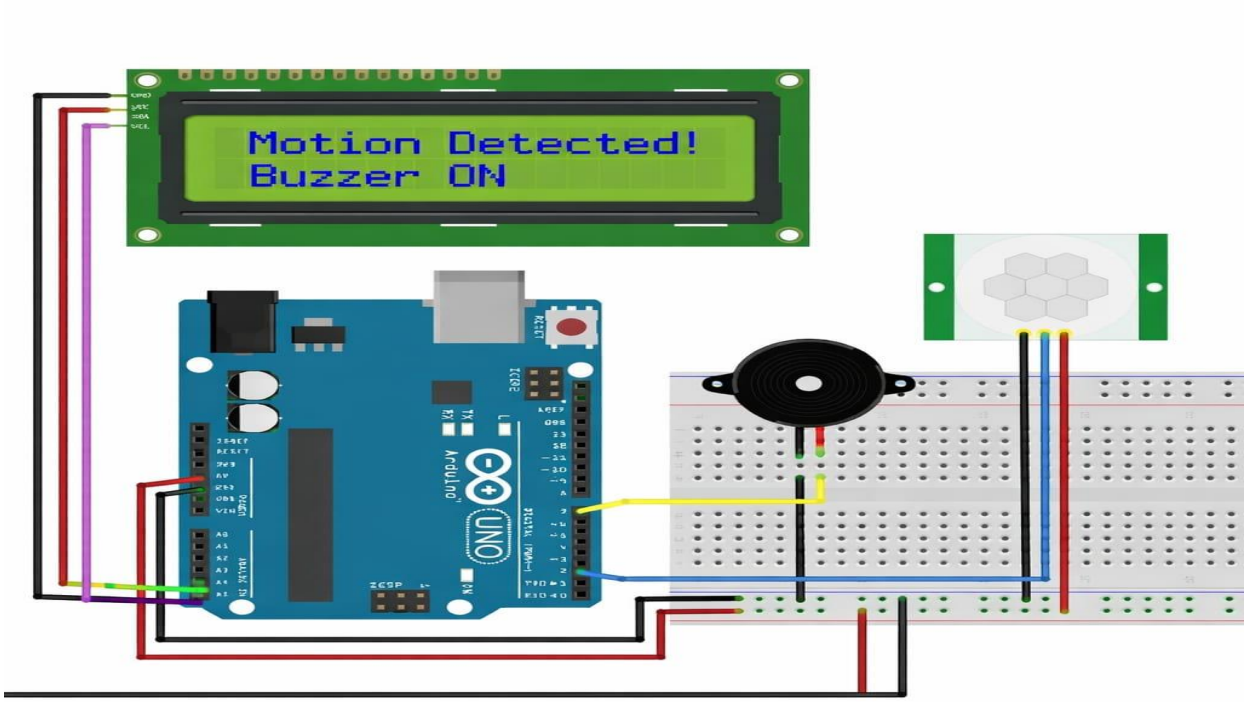

MOTION DETECTION SYSTEM FOR AUTOMATIC DEVICE CONTROL USING PIR SENSOR

Component	**Purpose**
Arduino UNO	Controller
PIR Sensor	Motion detection
LCD Display	Status display
Relay / LED	Output device

PIR sensor detects **infrared radiation changes** when a human moves.

Process:

1. Human body emits infrared radiation
2. PIR detects variation
3. Sensor sends digital HIGH signal to Arduino

ASSIGNMENT – 11

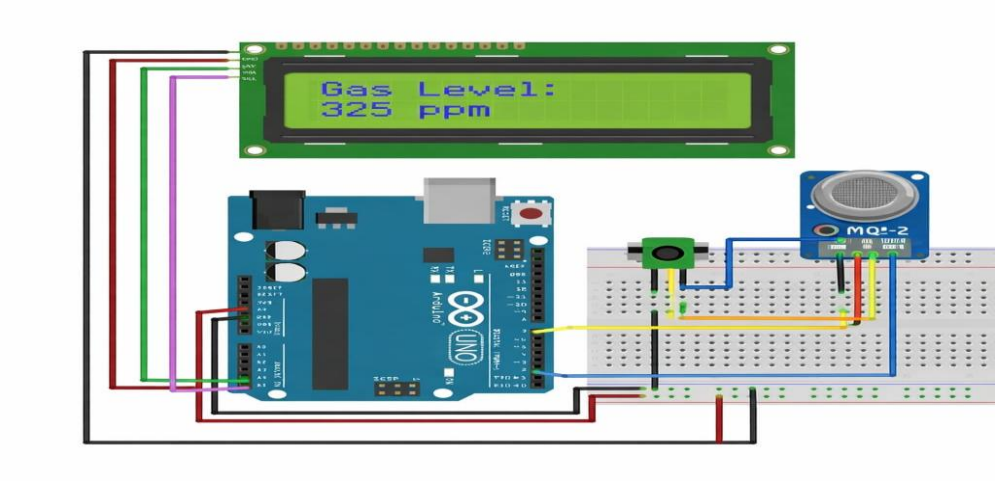

Gas Leakage Monitoring System

Component	Specification
Arduino UNO	Microcontroller
MQ-2 Gas Sensor	LPG, methane detection
16×2 LCD	Display
Buzzer	Alarm

Gas sensors detect gases using **metal oxide semiconductor sensing layer**.

Working:

1. Gas interacts with sensing element
2. Resistance changes
3. Analog voltage output generated
4. Arduino converts it to digital value